Daily Practice Problem (DPP)

Topic: Propositions, Implication, Biconditional, Truth tables, Predicates and Quantifiers

Name: _____

1. Identify the logic gates represented by the following symbols and write their truth tables:

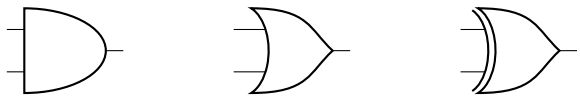

2. Find the sum-of-products expansions of these Boolean functions.

   (a) $F(x, y) = \bar{x} + y$
   (b) $F(x, y) = x\bar{y}$
   (c) $F(x, y) = 1$
   (d) $F(x, y) = \bar{y}$

3. Find the sum-of-products expansions of these Boolean functions.

   (a) $F(x, y, z) = x + y + z$
   (b) $F(x, y, z) = (x + z)y$
   (c) $F(x, y, z) = x$
   (d) $F(x, y, z) = x\bar{y}$

4. Draw the K-maps of these sum-of-products expansions in three variables.

   (a) $x\bar{y}\bar{z}$
   (b) $\bar{x}yz + \bar{x}\bar{y}\bar{z}$
   (c) $xyz + xy\bar{z} + \bar{x}y\bar{z} + \bar{x}\bar{y}z$

5. Use a table to express the values of each of these Boolean functions.

   (a) $F(x, y, z) = \bar{x}y$

   (b) $F(x, y, z) = x + yz$

   (c) $F(x, y, z) = x\bar{y} + \overline{(xyz)}$

   (d) $F(x, y, z) = x\,(yz + \bar{y}\bar{z})$

6. Use a K-map to find a minimal expansion as a Boolean sum of Boolean products of each of these functions of the Boolean variables x and y.

   (a) $\bar{x}y + \bar{x}\bar{y}$

   (b) $xy + x\bar{y}$

   (c) $xy + x\bar{y} + \bar{x}y + \bar{x}\bar{y}$

7. Show that a Boolean function can be represented as a Boolean product of maxterms. This representation is called the product-of-sums expansion or conjunctive normal form of the function. [Hint: Include one maxterm in this product for each combination of the variables where the function has the value 0.]

8. Use K-maps to find simpler circuits with the same output as each of the circuits shown.

(a)

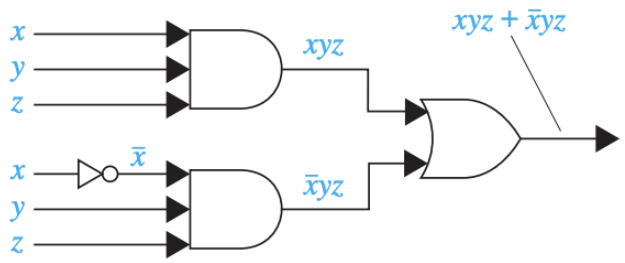

(b)

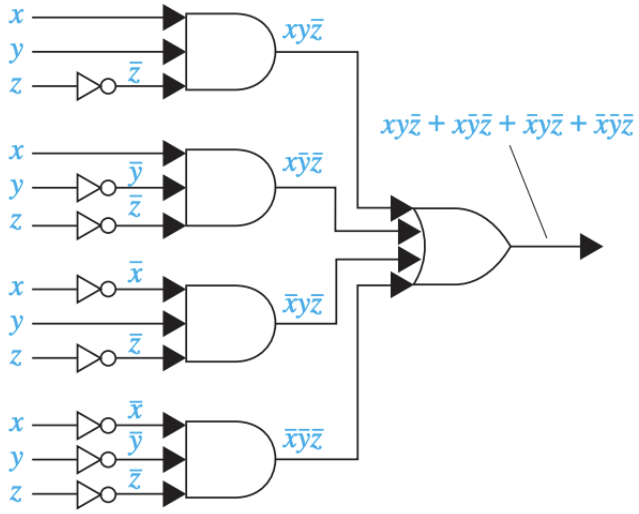

(c)

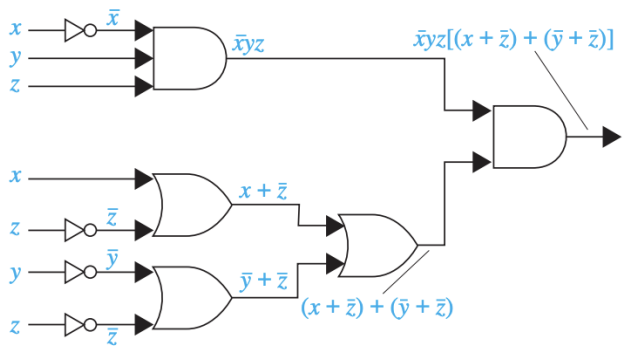

9. Find the sum-of-products expansions represented by each of these K-maps.

   (a)

	y	$\bar{y}$
x	1	
$\bar{x}$	1	1

   (b)

	y	$\bar{y}$
x	1	1
$\bar{x}$		

   (c)

	y	$\bar{y}$
x	1	1
$\bar{x}$	1	1

10. Draw the K-maps of these sum-of-products expansions in two variables.

    (a) $x\bar{y}$

    (b) $xy + \bar{x}\bar{y}$

    (c) $xy + x\bar{y} + \bar{x}y + \bar{x}\bar{y}$

11. (a) Consider a simplified class of circuits : there are two inputs $\{p, q\}$ and at most two gates, each of which is $\wedge$, $\vee$, or $\neg$. There are a total of $2^4 = 16$ distinct propositions over inputs $\{p, q\}$: four different input configurations, each of which can turn the light on or leave it off. Which, if any, of these 16 propositions *cannot* be expressed using up to two $\{\wedge, \vee, \neg\}$ gates?

    (b) *(programming required)* Consider the class of circuits : inputs $\{p, q, r\}$, and at most three gates chosen from $\{\wedge, \vee, \neg\}$. There are a total of $2^8 = 256$ distinct propositions over inputs $\{p, q, r\}$: eight different input configurations, each of which can turn the light on or leave it off. Write a program to determine how many of these 256 propositions can be represented by a circuit of this type.

12.

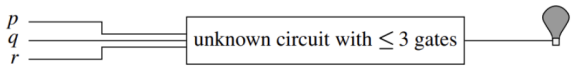

Figure An unknown circuit that takes three inputs $\{p, q, r\}$, and either turns on a light bulb (output of the circuit = true) or leaves it off (output = false). The circuit contains at most three gates, each of which is an $\wedge$, $\vee$, or $\neg$ gate.

See Figure for the description of a circuit. For each of the following exercises, draw a circuit with at most three gates that is consistent with the listed behavior. The light's status is unknown for unlisted inputs. (If multiple circuits are consistent with the given behavior, choose one with as few gates as possible.)

(a) The light is on when the true inputs are $\{q\}$ or $\{r\}$. It is off when the true inputs are $\{p\}$ or $\{p, q\}$ or $\{p, q, r\}$.

(b) The light is on when the true inputs are $\{p, q\}$ or $\{p, r\}$. It is off when the true inputs are $\{p\}$ or $\{q\}$ or $\{r\}$.

(c) The light is on for at least one input setting. It is off when the true inputs are $\{p\}$ or $\{q\}$ or $\{r\}$ or $\{p, q, r\}$.

(d) The light is on for at least two input settings. It is off when the true inputs are $\{p, q\}$ or $\{p, r\}$ or $\{q, r\}$ or $\{p, q, r\}$.

(e) The light is always off, no matter what the input.

13. A proposition φ is in *conjunctive normal form* (CNF) if φ is the conjunction of one or more clauses, where each clause is the disjunction of one or more literals, and where a literal is an atomic proposition or its negation. Definition of DNF says that φ is in *disjunctive normal form* (DNF) if φ is the disjunction of one or more clauses, where each clause is the conjunction of one or more literals. Give a proposition that is logically equivalent to each of the following, in the specified normal form.

(a) **DNF:** $\neg(p \wedge q) \Rightarrow r$

(b) **DNF:** $p \wedge (q \vee r) \Rightarrow (q \wedge r)$

(c) **DNF:** $p \vee \neg(q \Leftrightarrow p \wedge r)$

(d) **DNF:** $p \oplus (\neg p \Rightarrow (q \Rightarrow r) \wedge \neg r)$

(e) **CNF:** $\neg(p \wedge q) \Rightarrow r$

(f) **CNF:** $p \wedge (q \Rightarrow (r \Rightarrow q \oplus r))$

(g) **CNF:** $(p \Rightarrow q) \Rightarrow (q \Rightarrow r \wedge p)$

(h) **CNF:** $p \Leftrightarrow (q \vee r \vee \neg p)$

14. A CNF proposition φ is in *3CNF* if each clause contains exactly three distinct literals. (Note that p and $\neg p$ are distinct literals.) Similarly, a proposition φ is in *3DNF* if it is the disjunction of one or more clauses, each of which is the conjunction of exactly three distinct literals.

(a) In terms of the number of clauses, what's the smallest 3CNF formula that's a tautology?

(b) In terms of the number of clauses, what's the smallest 3CNF formula that's not satisfiable?

(c) In terms of the number of clauses, what's the smallest 3DNF formula that's a tautology?

(d) In terms of the number of clauses, what's the smallest 3DNF formula that's not satisfiable?

15. Consider 3CNF propositions over the variables $\{p, q, r\}$ for which no clause appears more than once. (The following exercises are boring if we omit the restriction about repeating clauses; we could repeat the same clause as many times as we please:

$$(p \vee q \vee r) \wedge (p \vee q \vee r) \wedge (p \vee q \vee r) \wedge \cdots$$

Two clauses that contain precisely the same literals (in any order) do not count as distinct. (But recall that a single clause can contain both a variable and its negation.))

(a) In terms of the number of clauses, what's the largest 3-variable distinct-clause 3CNF proposition (at all)?

(b) In terms of the number of clauses, what's the largest 3-variable distinct-clause 3CNF proposition that's a tautology?

(c) In terms of the number of clauses, what's the largest 3-variable distinct-clause 3CNF proposition that's satisfiable?

Challenge Problem

Let $T = \{1, \ldots, 12\} \times \{0, 1, \ldots, 59\}$ be the set of numbers that a digital clock in 12-hour mode can display. We can think of a clock as a function $c : T \to T$: if the real time is $t \in T$, the clock displays the time $c(t)$. (For example, if the clock *fastby7* runs 7 minutes fast, then fastby7(12:00) = 12:07.) Formalize the following predicates using only standard quantifiers, equality symbols, and the function $\text{add} : T \times \mathbb{Z}_{\geq 0} \to T$, where $\text{add}(t, x)$ is the time that is x minutes later than t.

(a) A clock is *right* if it always displays the correct time. Formalize *right*.

(b) A clock *keeps time* if there's some fixed offset by which it is always off from being right. (For example, *fastby7* above correctly keeps time.) Formalize *keepsTime*.

(c) A clock is *close enough* if it always displays a time that's within 2 minutes of the correct time. Formalize *closeEnough*.

(d) A clock is *broken* if there's some fixed time that it always displays, regardless of the real time. Formalize *broken*.

(e) "Even a broken clock is right twice a day," they say. (They mean: "even a broken clock displays the correct time at least once per T.") Using the *broken* predicate from question–d, formalize the adage and prove it true.

Self-Evaluation

How confident do you feel after solving this practice sheet?

Low 1 2 3 4 5 High